HISTORIC / INDUSTRIAL LEGACY DOOR – HEAD DETAILS
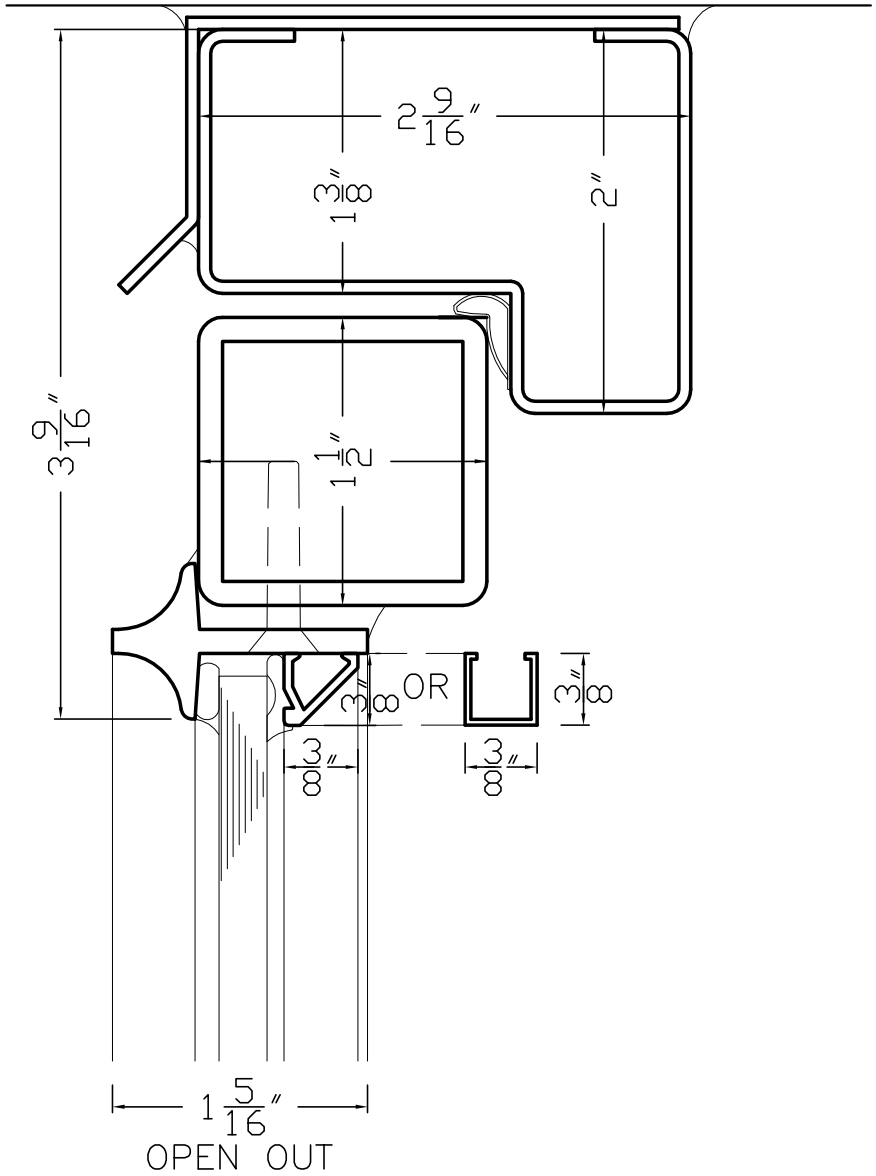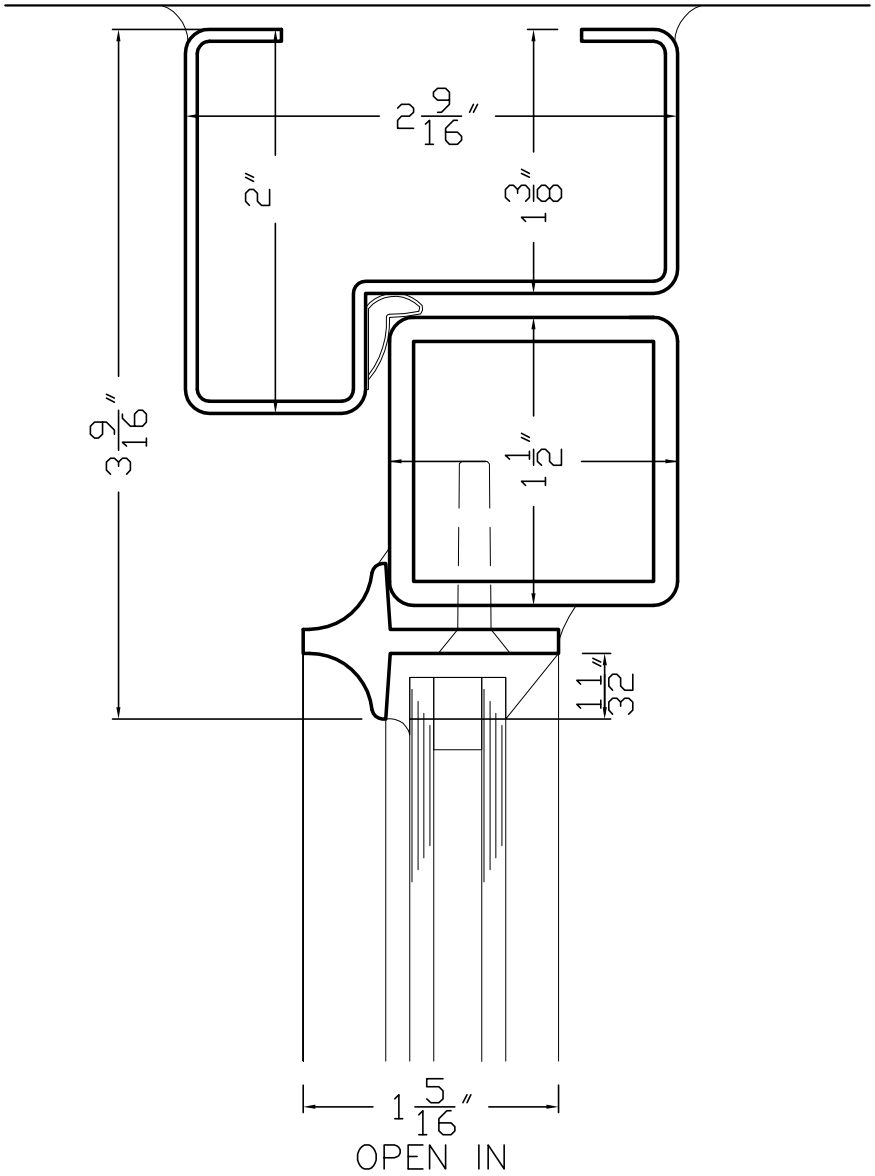
ACCEPTS UP TO 1/4" GLASS WITH SQUARE OR SLOPED GLAZING BEAD
ACCEPTS UP TO 1/2" GLASS WITH PUTTY GLAZING